FAT RAT
GUITAR EFFECT
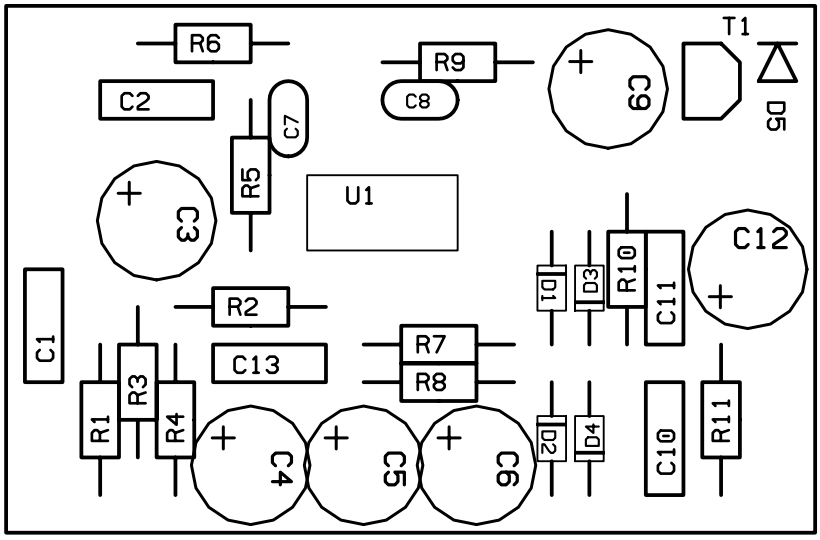
LAYOUT 9/2014
STEPHAN ASMUS